Bronkhorst®

doc.no.: 9.16.201D
date: 10-03-2021

FLOW-BUS

MI1x0
Hook-up diagram

FLOW-BUS connection

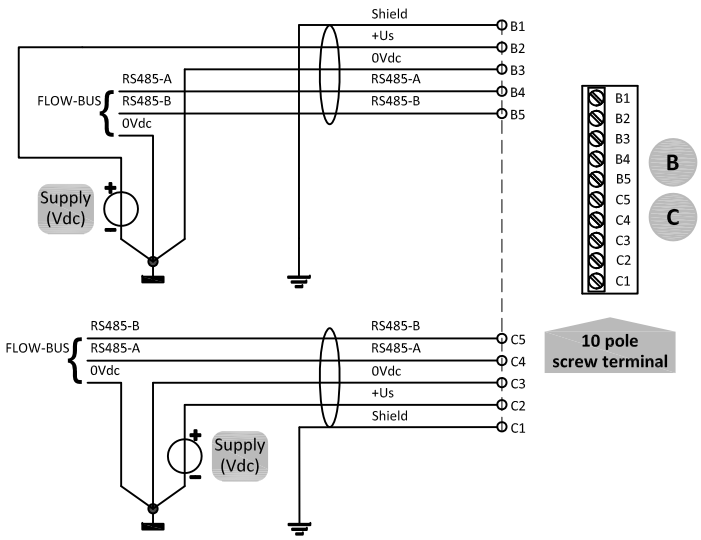

Note:
- For information about the power supply and bus termination, see doc.nr. 9.17.024 for more details.

Note:
- All connections of terminals B and C are connected in parallel.

USB connector for service purposes

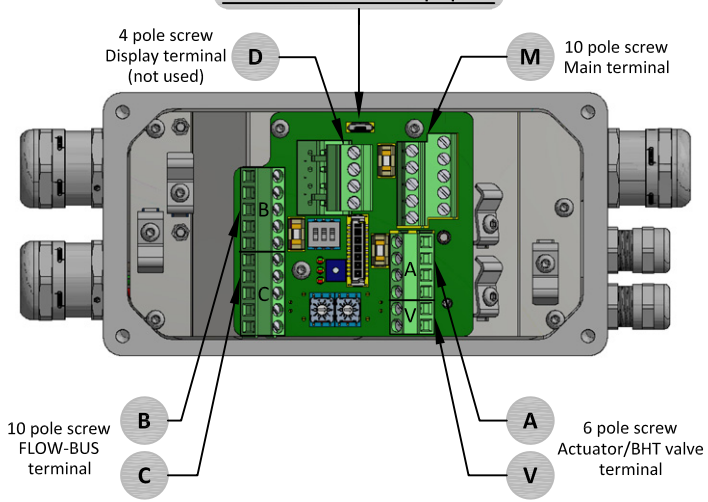

Note:
- For information about the 6 pole screw terminal A/V, see doc.nr. 9.16.205 for more details.

POWER SUPPLY WARNING

Do not power the instrument simultaneously from two different power sources (e.g. bus connection and Plug-in Power Supply).
Doing so will damage the printed circuit board irreparably.

Model key explanation

For model key explanations of optional bus and IO configurations see 9.16.205

MI1x0 - X X X - .. - . - . - .. - ... - . - ...

D	+15Vdc - 24Vdc power supply
A	Output / setpoint 0-5Vdc
B	Output / setpoint 0-10Vdc
F	Output 0-20mAdc sourcing Setpoint 0-20mAdc sinking
G	Output 4-20mAdc sourcing Setpoint 4-20mAdc sinking
H	Output 4-20mAdc sourcing + HART Setpoint 4-20mAdc sinking
R	(FLOW-BUS), Normally closed valve (NC)
S	(FLOW-BUS), Normally opened valve (NO)

Main terminal + General notes

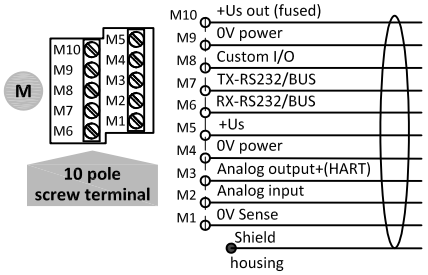

Note:
- Use only suitable cables for installation and install them properly.
- Do **not connect** an external valve to instruments which is set as meter.
- Terminal M8, M9 and M10 may be used for customized IO configurations, see 9.16.205.
- When terminal M6 and M7 are set as fieldbus instead of RS232, see 9.16.205 for hook-up of the fieldbus interface.
- If the instrument is set for digital communication, it is not possible to use the analog input (terminal M2) as setpoint source by default. See doc. no. 9.17.120 for changing the default control mode for the instrument.

Analog 0-5 or 0-10Vdc

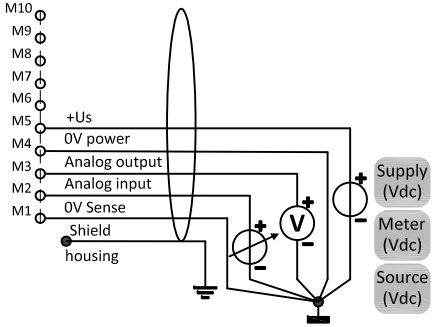

Note:
- 0V power and 0V sense should be separately connected to the 0V.

Analog 0-20 / 4-20mAdc

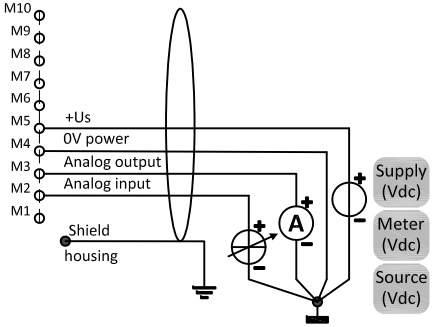

Note:
- In analog mode with 'mA signals' (0V sense) does not need to be connected. The instrument's operation will not be effected in case is already hooked-up.

Analog 4-20mA + HART (option)

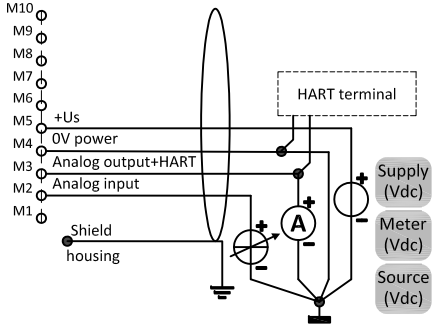

Note:
- When using the HART option, the 4-20mA output must be connected to ground by a resistance of at least 250Ω - max. 600Ω.
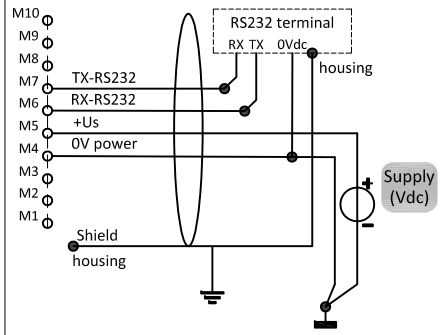
Digital RS232 connection